FEATURES

- Fully encapsulated Plastic Case
- 3 Mounting Versions:
  - PCB Mounting with Solder Pins
  - Chassis Mounting with Screw Terminals
  - DIN-Rail Mounting
- Package Dimension 88.9x67.5x34.2 mm (PCB Version)
- Universal Input 85-264VAC, 47-440 Hz
- Protection Class II
- Extended Operating Temp.Range -40°C to +60°C at full Load
- LED Output Indicator (Chassis Version Models)
- Industrial Safety to UL/cUL/IEC/EN 60950-1 and UL508
- Medical Safety Approval to UL/cUL/IEC/EN 60601-1 3rd Edition
- Over Load Protection
- 3 Year Product Warranty

NEW

c UL us LISTED E331639 45VV IND. CONT. EQ. | c TÜV us UL 60950-1 UL 60601-1 | CE | CB Scheme | RoHS Compliant | 3 year warranty

PRODUCT OVERVIEW

The new MINMAX AYM-60 series is a range of fully encapsulated AC/DC power modules. These high performance products feature an extended operating temperature range of -40°C to +80°C. Universal input voltage 85-264VAC and UL/IEC/EN safety approvals including medical safety and UL508 listing qualify these power supplies modules for applications in products with worldwide markets.EMI-filter meets EN55022, class B and FCC,part15, class B. The AYM-60 series power modules provide an economical solution for many space critical applications in commercial, medical and industrial electronic equipment.

Model Selection Guide

Model Number PCB Mounting (For model with Chassis Mounting, add suffix **C**)	Output Voltage	Output Current	Input Current		Max. capacitive Load	Efficiency (typ.)
			115VAC, 60Hz	230VAC, 50Hz		
		Max.	@Max. Load			@Max. Load, 115VAC
	VDC	mA	mA(typ.)		μF	%
AYM-60S051	**5.1**	**10000**	880	528	8000	84
AYM-60S12	**12**	**5000**	1000	600	3900	87
AYM-60S15	**15**	**4000**	1000	600	3300	87
AYM-60S24	**24**	**2500**	1000	600	1500	87
AYM-60S48	**48**	**1250**	988	593	680	88

Input Specifications

Parameter	Model	Min.	Typ.	Max.	Unit
AC Voltage Input Range	All Models	85	---	264	VAC
Input Frequency Range		47	---	440	Hz
DC Voltage Input Range		120	---	370	VDC
No-Load Power Consumption		---	---	0.5	W
Inrush Current (Cold Start at 25°C)	115VAC	---	---	30	A
	230VAC	---	---	60	A

Output Specifications

Parameter	Conditions		Min.	Typ.	Max.	Unit
Output Voltage Accuracy			---	±1.0	±2.0	%
Line Regulation	Vin=Min. to Max.		---	±0.2	±1.0	%
Load Regulation	Iout=Min. to Max.		---	±0.5	±1.0	%
Min.Load	No minimum Load Requirement					
Ripple & Noise	0-20 MHz Bandwidth	(5.1VDC Output Models)	---	2.0	3.0	%V_{PP} of Vo
		(Other Output Models)	---	1.0	1.5	%V_{PP} of Vo
Over Voltage Protection	Zener diode clamp		---	120	---	% of Vo
Temperature Coefficient			---	±0.02	---	%/°C
Overshoot			---	---	5	%
Current Limitation	85VAC, Hiccup Mode, auto-recovery (long term overload condition may cause damage)		105	---	---	%Inom.
Short Circuit Protection	Hiccup mode, indefinite (automatic recovery)					

General Specifications

Parameter	Conditions	Min.	Typ.	Max.	Unit
I/O Isolation Voltage (reinforced)		4000	---	---	VACrms
Leakage Current		---	80	---	μA
I/O Isolation Resistance	500 VDC	1000	---	---	MΩ
Switching Frequency		---	100	---	KHz
Hold-up Time	115VAC, 60Hz	---	20	---	ms
	230VAC, 50Hz	---	80	---	ms
MTBF (calculated)	MIL-HDBK-217F@25°C, Ground Benign	125,000	---	---	Hours
Protection Class II		According IEC/EN 60536			
Safety Approvals	IEC/EN 60950-1, 60601-1 3rd, 2XMOPP cUL/UL 60950-1, 60601-1 3rd, 2XMOPP, UL 508 listed				

EMC Specifications

Parameter	Standards & Level	Performance
Conducted and radiated EMI	EN55011, EN55022, FCC part 15	Class B
ESD	EN61000-4-2 air ± 8kV , Contact ± 4kV	A
Radiated immunity	EN61000-4-3 10V/m	A
Fast transient	EN61000-4-4 ± 2kV	A
Surge	EN61000-4-5 ±1kV	A
Conducted immunity	EN61000-4-6 10Vrms	A
PFMF	EN61000-4-8 30A/m	A
Dips	EN61000-4-11 30% 10ms	A
Interruption	EN61000-4-11 >95% 5000ms	B

Environmental Specifications

Parameter	Conditions	Min.	Max.
Temperature Range (operational)	Ambient	-40°C	+80°C
Power Derating	Above +60°C		2.3W / °C
Storage Temperature Range		-40°C	+95°C
Humidity (non condensing)		---	95% rel. H
Cooling	Free-Air convection		

Notes

1. **This product is not designed for use in critical life support systems, equipment used in hazardous environment, nuclear control systems or other such applications which necessitate specific safety and regulatory standards other the ones listed in this datasheet.**
2. Specifications typical at Ta=+25℃, resistive load, 115VAC, 60Hz input voltage, after warm-up time rated output current unless otherwise noted.
3. Safety approvals cover frequency 47-63 Hz.
4. We recommend to protect the converter by a slow blow fuse in the input supply line.
5. Other input and output voltage may be available, please contact factory.
6. To order the module with chassis mount package, please add a **suffix C** (e.g. AYM-60S12C).
7. Part number for DIN-Rail mounting bracket: **AC-DIN-02**
8. That "natural convection" is about 20LFM but is not equal to still air (0 LFM).
9. Specifications are subject to change without notice.

Package Specifications PCB Mounting

Mechanical Dimensions

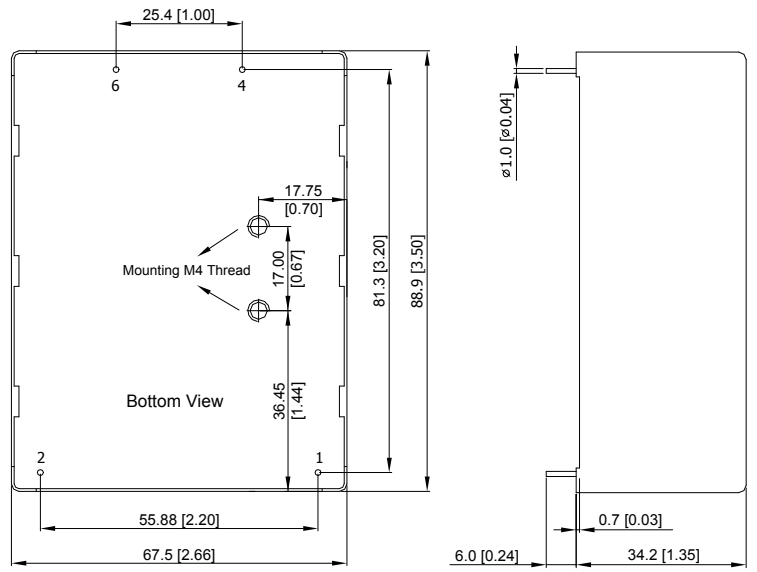

Pin Connections

Pin	Function
1	AC (N)
2	AC (L)
4	+Vout
6	-Vout

- ► All dimensions in mm (inches)
- ► Tolerance: ±1.0 (±0.04)
- ► Pin diameter ∅ 1.0 ±0.1 (0.04±0.004)

Physical Characteristics

Case Size	:	88.9x67.5x34.2mm (3.50x2.66x1.35 inches)
Case Material	:	Plastic resin (flammability to UL 94V-0 rated)
Pin Material	:	Copper Alloy with Gold Plate Over Nickel Subplate
Weight	:	360g

Package Specifications Chassis Mounting (order code suffix C)

Mechanical Dimensions

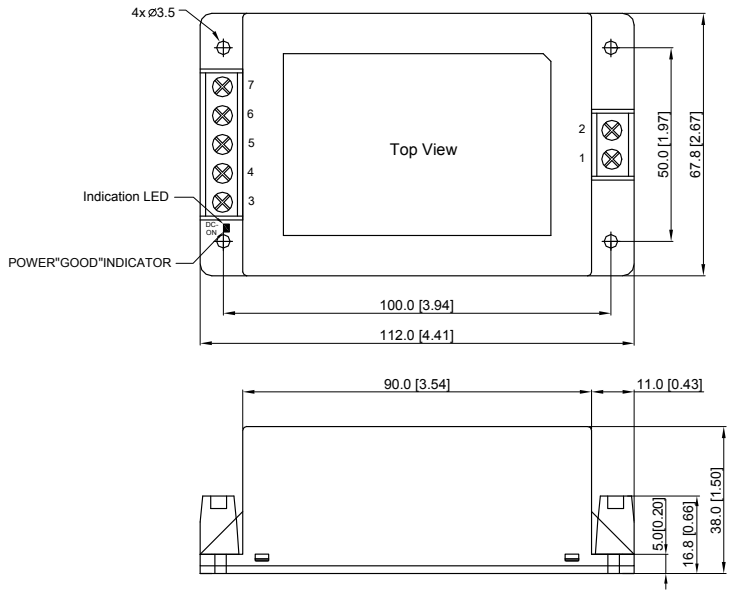

Connections

Pin	Function
1	AC (N)
2	AC (L)
3	NC
4	+Vout
5	NC
6	-Vout
7	NC

NC: No Connection

- ► All dimensions in mm (inches)
- ► Tolerance: ±1.0 (±0.04)

Physical Characteristics

Case Size	:	112.0x67.8x38.0mm (4.41x2.67x1.50 inches)
Case Material	:	Plastic resin (flammability to UL 94V-0 rated)
Weight	:	380g

Package Specifications with DIN Rail Mounting Bracket

Mechanical Dimensions

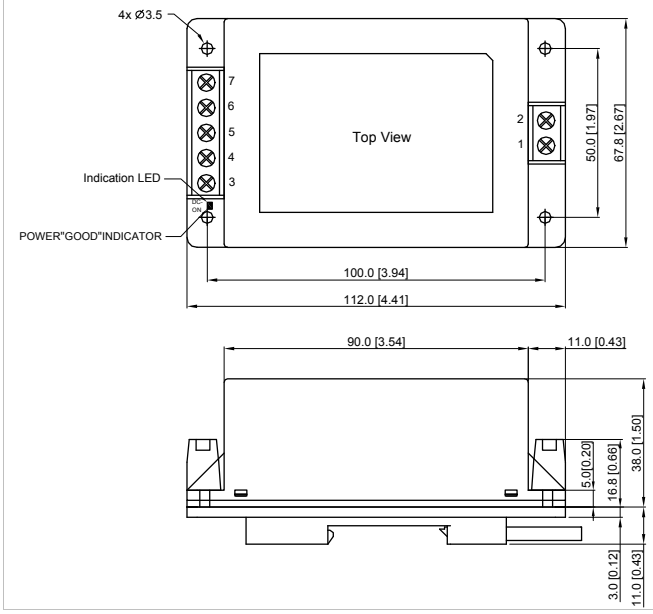

Physical Characteristics

Case Size	:	112.0x67.8x38.0mm (4.41x2.67x1.50 inches)
Case Material	:	Plastic resin (flammability to UL 94V-0 rated)
Weight	:	433g
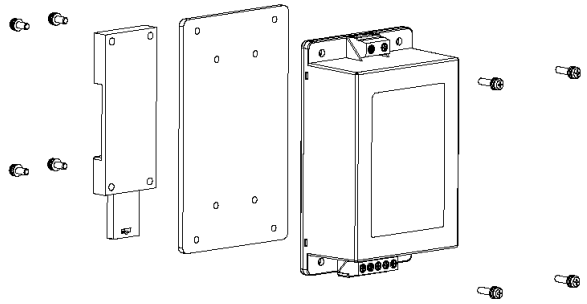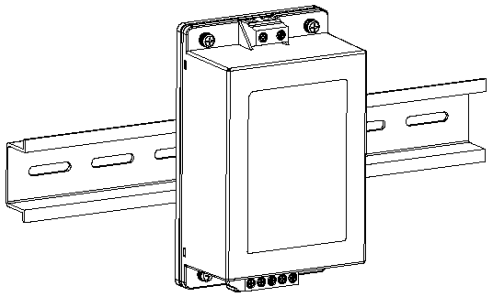
DIN-Rail Mounting Bracket (Order Code for Kit : AC-DIN-02)